SIN.EQLC250 - QuickStartGuide

M-Bus Level Converter 250

- Connections for meter reading through RS232, RS485 and M-Bus Slave
- Typical use with SIN.EQRTU4, SIN.EQRTU1T/X or SIN.EQRTUEVO1T datalogger
- M-Bus signal repeater.
- Manages up to 250 M-Bus devices
- Communication speed from 300bps to 9600 bps
- Power supply 230Vac
- Maximum power consumption 45W
- 24 Vdc output, supports datalogger power supply
- Mounting on DIN rail (4 modules + 4 modules)
- Short-circuit and surge protection
- Galvanic isolation (EN13757-2)
- Echo Cancellation
- Collision Detect with Break-Signalling

A. AC mains power
B. Earth
C. Power Level Converter
D Power Out 24 Vdc (15W)
E. RS232 BUS connector
F. RS485 BUS connector
G. M-Bus Slave Connector
H. M-Bus Master Connector
I. Leds for status indication
L. Firmware update button

> Failure to comply with national safety regulations may result in personal injury and property damage.
> Observe national provisions and comply with the appropriate safety regulations.
> This equipment is not suitable for use in locations where children are likely to be present..

1. INSTALLATION AND POSITIONING

It is suggested not to place the device in adherence with others in order to avoid their overheating.

2. SIN.EQLC250 CONNECTIONS

M-Bus Slave Input Connector

(1) - Pin 1 connection to M-Bus network (Repeater)
(2) - Pin 2 connection to M-Bus network (Repeater)

M-Bus Master Output Connector

(10) - Pin 1 connection to M-Bus meters
(9) - Pin 2 connection to M-Bus meters

Connection to datalogger

RS-485:
(3) - Pin D: REF
(4) - Pin E: D-
(5) - Pin F: D+

RS-232:
(6) - Pin A: TX
(7) - Pin B: RX
(8) - Pin C: GDN

Power supply

(11) - Pin Va Input 1 for power supply
(12) - Pin Vb Input 2 for power supply

Power supply*

(1) - Pin 1 Input connection for main power - 230 Vac
(2) - Pin 2 Input connection for main power - 230 Vac
(3) - Earth

> ***Observe the following voltage supply values:**
> 230 vac, 50 Hz through dedicated power supply

Power supply SIN.EQLC250

(4) - Pin Va power output for level converter
(5) - Pin Vb power output for level converter

Power supply for datalogger

(6) - Pin V+ Output for 24 Vdc
(7) - Pin V- Output for 24Vdc

Example of connection to a datalogger

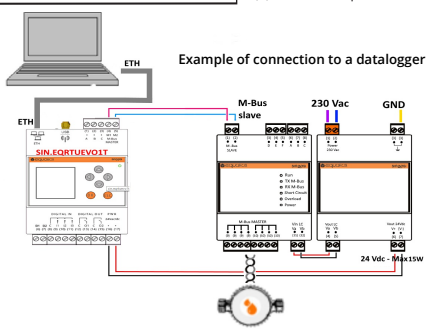

3. FUNCTIONALITY

SIN.EQLC250 is a device that allows reading of devices using M-Bus (Meter Bus) communication standard as required by EN 13757 – 2 (physical layer).
At every SIN.EQLC250 level converter is possible to connect up to 250 devices to terminal "H".
There are two possible different uses of the device:
1) In "MASTER" mode: Connecting through RS232 or RS485 ports using third party software or devices.
Simultaneous communication of different ports does not work!
2) In "SLAVE" mode: the device works like an M-Bus repeater. The signal regenerator therefore allows the extension of an existing M-Bus network

4. STATUS LEDs DESCRIPTION

RUN (green)	- Blinking at 1 Hz (slow): Setup in progress. Communication is disabled. - Blinking at 10 Hz (fast). Wait to update. - On: Ready to work.
TX M - Bus (green)	Shows transmission of data on the M-Bus network connected to terminals (9) and (10): - ON: transmission in progress - OFF : no transmission in progress
RX - M-Bus (orange)	Shows reception of data on the M-Bus network connected to (6) and (7): - ON: reception in progress - OFF : no reception in progress
Short Circuit (red)	Indicates the presence of a short circuit on the bus, a very high consumption or collision
Overload (orange)	Indicates the presence of an overload on the bus that can prevent operation: - ON: Overload on the bus that can prevent operation - OFF: No overload error
Power (green)	Shows power supply status: - ON: power supply OK - OFF: power supply non OK

5. M-Bus NETWORK WIRING

Please, respect the following guide-lines for the lenght of a M-Bus cable and the number of slaves.

TYPE	Plant	Max distance between master and slave	Total cable Length	Cable section	Number of slaves	Max baudrate
A	Small residential buildings	350m	1000m (<30 Ohm)	0.5 mm2 (0.8 mm)	250	9600
					64	9600
B	Large residential buildings	350m	4000m (<30 Ohm)	0.5 mm2 (0.8 mm)	250	2400
					64	9600
C	Small district	1000m	4000m (<90 Ohm)	0.5 mm2 (0.8 mm)	64	2400

6. CONNECTION OF SIN.EQLC250 TO M-Bus NETWORK IN MASTER MODE

In an M-Bus network , the connections are independent of the polarity and the allowed network topologies are "line", "bus", "star" and "mixed". .

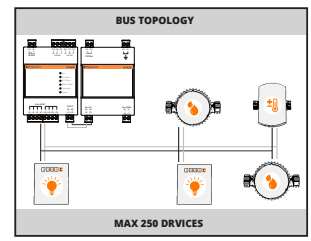

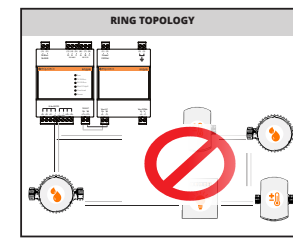

> The ring connection of the devices is **NOT ALLOWED** while the star or mixed topology are preferable as they allow to isolate some pathways in the event of maintenance.
> The connection of devices to the network is independent of the polarity of the two conductors.

7. CONNECTION OF SIN.EQLC250 TO EXTEND AN EXISTING M-BUS NETWORK

L: M-Bus Load (< 1,5 mA)

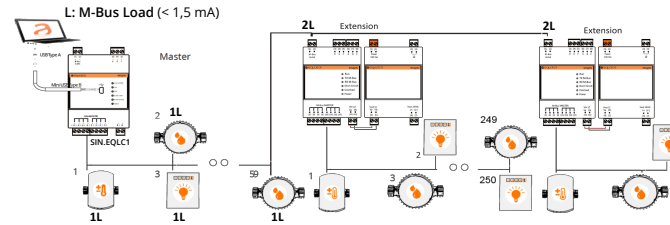

> It is possible to extend the network by adding up to a maximum of 6 M-Bus level converters 250 connected in parallel.

8. FIRMWARE UPDATE OF SIN.EQLC250

It is possible to update the SIN.EQLC250 firmware using the **Equobox Toolkit Lite** software of Sinapsi starting from since version 2.0.15. To connect the level converter to the PC, use the USB RS232 Equobox cable.
SIN.EQUSB232 (not included). It is possible, alternatively, to use an RS232 cable respecting the following connection:
A (level converter)-->**RX** (PC), **B**(level converter)-->**TX** (PC), **C** (level converter)-->**GND** (PC)

Open the software e:
- Login with your credentials, or, if first used, to make reference to the relevant manual
- Select the **Settings** menu
- Select the **M-Bus Interface** tab

In the Firmware **Level Converter 250** section (SIN.EQLC250):
- Select the firmware version to install.
- Select the COM port
- Press the button: **Update Firmware**
- Follow the step-by-step instructions of the software

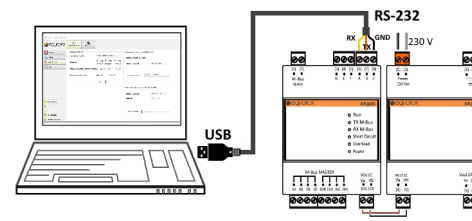

TROUBLESHOOTING

1) The device does not turn on (Power Led off)
- Check with multimeter that the supply voltage to the terminals (8) and (9) is about 40 V.

2) Led Overload on:
- If the LED is on without any communication (LED Rx and Tx do not flash), there is an overload caused by a possible short circuit between the two poles of the bus or by an excessive number of connected devices. Check the wiring.

3) The datalogger connected to the terminal does not detect some or all devices:
- Check the Run LED is on
- Check that the Short Circuit LED is off.
- Check the correct connection of the bus between the datlogger and terminal F or E of the SIN.EQL250.
- Check with the multimeter that the voltage is between 30Vdc-42Vdc
- Check that the communication settings on the M-Bus datalogger bus are compatible with the communication settings of the devices (communication speed, addressing).

4) The devices connected to the level converter in repeater mode do not communicate:
- Verify the correct power supply
- Check that the Run LED is on
- Check that the Short Circuit LED is off.
- Check that the M-Bus network is connected to terminal G of the SIN.EQLC250.